# Non-Newtonian gravity, long-range forces

Josh Long

*Indiana University*

Parameterization, Motivation

- Mass-coupled (dark energy/chameleons)
- Spin-coupled (axions)

Long-range and short-range limits

Nuclear experiments and proposals

- Scattering and interferometry
- Bouncing UCN
- Beam and static NMR

Summary

*FS&N Town Meeting*
*Chicago, 28-29 September 2014*

# Non-Newtonian gravity (sample)

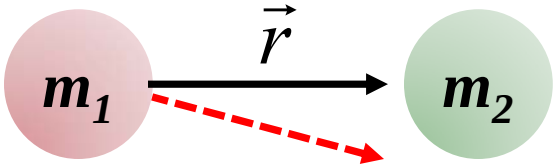


$$\vec{F} = -G\frac{m_1 m_2}{r^2}\hat{r}$$

$$\vec{F} \sim B, L, B-L, \ldots$$

$$\vec{F} = -G\frac{m_1 m_2}{r^{2+\varepsilon}}\hat{r}$$

$$G_{\alpha\beta} \neq 8\pi T_{\alpha\beta}$$

## Equivalence Principle Tests

*Composition-dependence, < few % of $F_G$*

**Eötvös (1889-1909)**

**Dicke (1960s)**

**Eöt-Wash (~1990-present)**

## Tests of the Inverse Square Law

*Precision $F_G$, null tests, large effects >> $F_G$*

**Long (1976)**

**Newman (1980-85)**

**Eöt-Wash (~1990-present)**

## Tests of Lorentz Invariance

*Precision $F_G$*

**Muller, Chu (2008-) [1]**



[1] K.-Y. Chung et al., PRD 80 016002 (2009)

# Parameterization

*Yukawa Interaction*

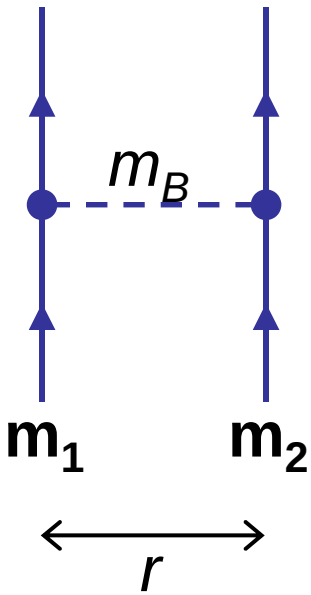


$$V(r) = -G\frac{m_1 m_2}{r}\left[1 + \alpha e^{-r/\lambda}\right]$$

$\lambda = \hbar / m_B c$ = **range**

$\alpha$ = strength relative to gravity

*Power Law*

$$V(r) = -G\frac{m_1 m_2}{r}\left[1 + \beta_n\left(\frac{r_0}{r}\right)^{n-1}\right]$$

$r_0$ = experimental scale

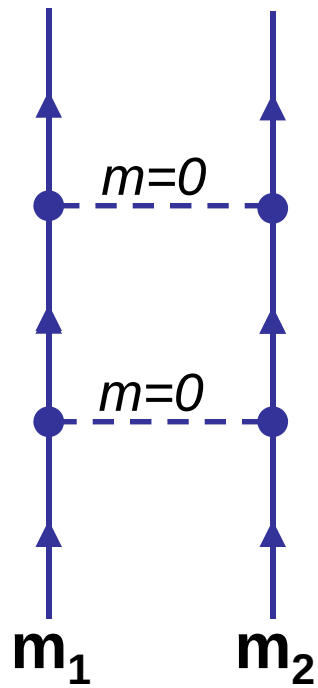


set limits on $\beta_n$ for $n$ = 2 - 5

# Limits from 1 mm to 1 light year [1,2]

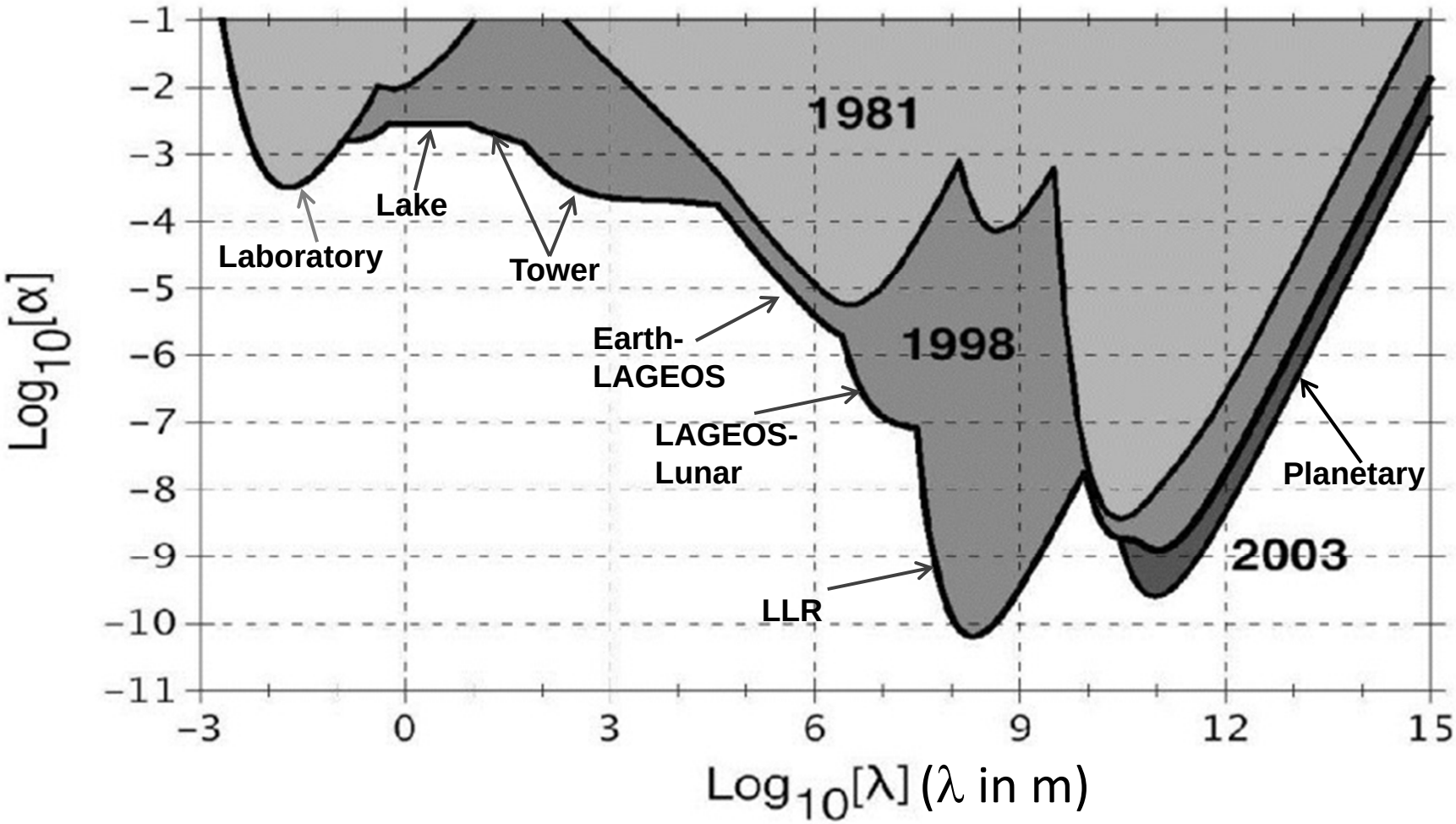



[1] E. Fischbach and C. Talmadge, *The Search for Non-Newtonian Gravity* (Springer-Verlag, 1999)

[2] S. Reynaud and M.-T. Jaekel, Int. J. Mod. Phys. A 20 2294 (2005)

# Short-range limits

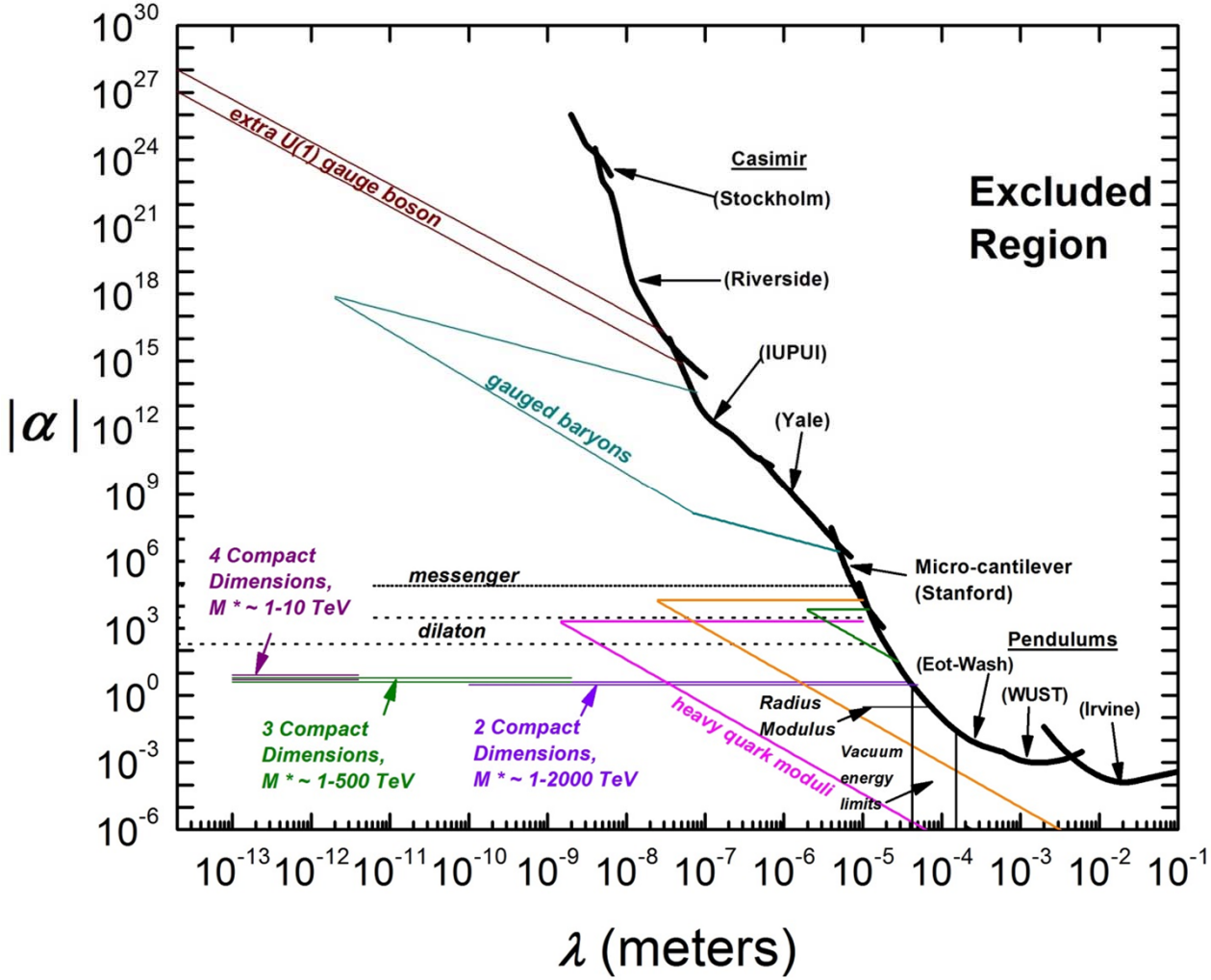


Reviews: I. Antoniadis et al., C. R. Physique 12 755 (2011)
E. Adelberger et al., Prog. Part. Nucl. Phys. 62 102 (2009)

WUST: S-Q. Yang et al., PRL 108 081101 (2012)

Yale: A. Sushkov et al., PRL 107 171101 (2011)

Theory: S. Dimopoulos, A. Geraci, PRD 68 124021 (2003)
P. Fayet, PRD 75 115017 (2007)

# Challenge: scaling and backgrounds

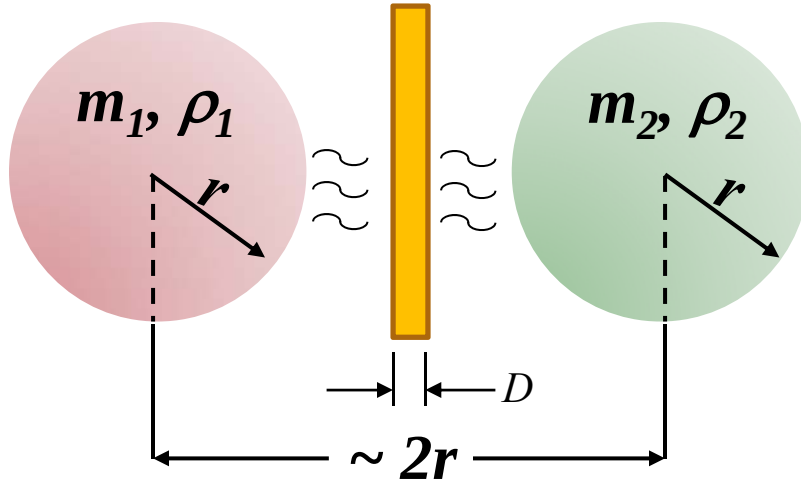


$$F = \frac{G m_1 m_2}{(2r)^2} = \frac{G \rho_1 \rho_2 (4r^3)^2}{4r^2} \sim G \rho_1 \rho_2 r^4$$

$\rho_1 = \rho_2 = 20$ g/cm$^3$, $r = 10$ cm $\Rightarrow F \approx 10^{-5}$ N

$r = 100$ μm $\Rightarrow F \approx 10^{-17}$ N

Electrostatic: $$F_E \sim \frac{\varepsilon_0 V^2}{r^2}$$

Magnetic (contaminant): $$F_M \sim \frac{\mu_0 [\vec{\mu}_1 \cdot \vec{\mu}_2 - 3(\vec{\mu}_1 \cdot \hat{r})(\vec{\mu}_2 \cdot \hat{r})]}{r^4}$$

Casimir: $$F_C \sim \frac{\hbar c}{r^4}$$

Shielding fails (modes penetrate) below $D \sim \lambda_P \sim 100$ nm

# Neutron scattering

Neutron: $q = 0$, Casimir-polder: $U_C = -\frac{3\hbar c}{8\pi}\frac{\alpha_0}{l^4}$, frequency measurements

Electric polarizability of atoms: $\alpha_0 \sim 10^{-24}$ cm$^3$; neutrons: $\alpha_0 \sim 10^{-42}$ cm$^3$

$$\Rightarrow f_{\text{tot}}(q) = f_{\text{nucl}}(q) + f_{ne}(q) + f_Y(q)$$

$f_{\text{nucl}}$: isotropic, $q$-indep. (low E)

$f_Y(q)$: calculable (in terms of $\alpha$, $\lambda$)

$f_{ne}(q) = b_{ne}\,[Z - f_{\text{atom}}(q)]$

calculable,
measured (X-ray)

discrepant:

Proposal: SANS on Xe at HANARO (Daejon)

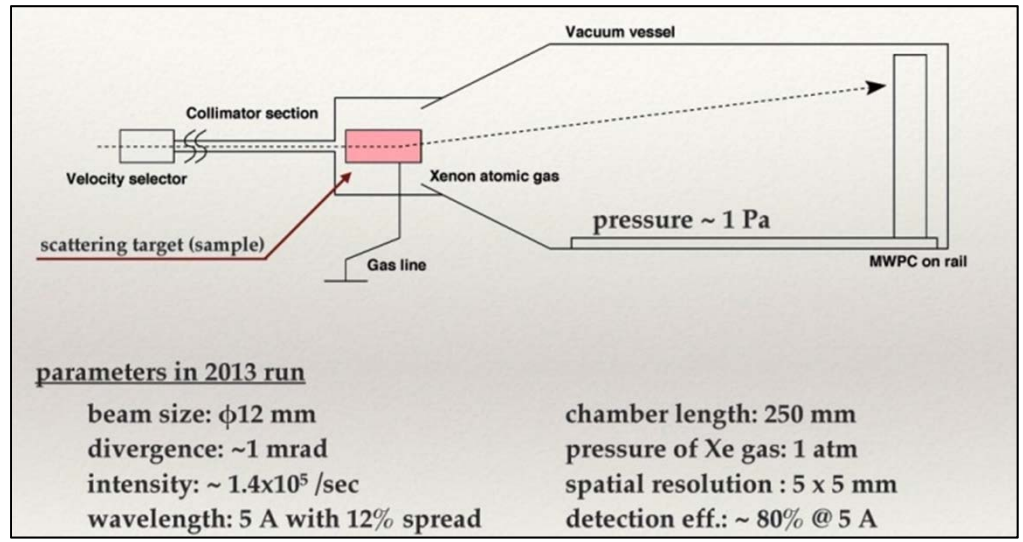


Ideal noble gas: $b_{ne}$ measured, $f_{\text{atom}}$: calculable , measured, $q$-dependence

V. Nesvizhevsky, G. Pignol, K. Protasov, PRD 77 034020 (2008):

$\Delta b_{ne}$ from measurements, fits to neutron EM form factor:

$$\Delta b_{ne} \leq 6 \times 10^{-4}\,\text{fm}$$

# n-interferometry

*F. Wietfeldt*

## Tulane-NIST neutron charge radius experiment

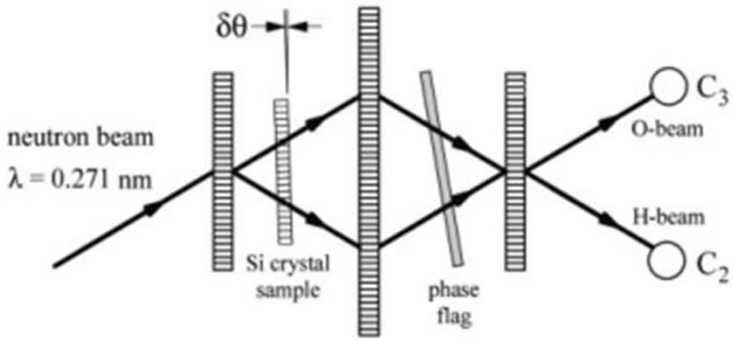


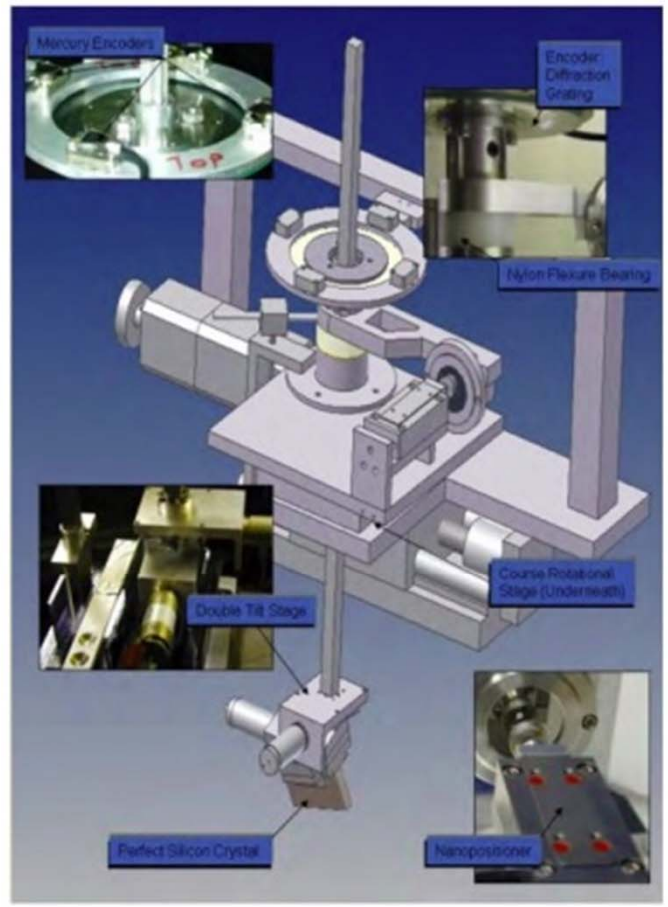


n-e scattering length: $b_{ne} = \dfrac{b_{coh}(\text{on Bragg}) - b_{coh}(\text{off Bragg})}{Z\left[1 - f(\vec{H}_{111})\right]}$

n charge radius $\langle r_n^2 \rangle = 3a_0 \left(\dfrac{m_e}{m_n}\right) b_{ne} = (86.34\ \text{fm}) b_{ne}$

precision goal for $\langle r_n^2 \rangle$ is <1%

comparison at two different neutron wavelengths can set new limits on non-Newtonian gravity (Greene and Gudkov, 2007)

$$b_{\text{coh}} = b_{\text{nucl}} + b_Y$$

$$F_{111} = \sqrt{32}(b_{\text{nucl}} + b_{ne}[1 - f(H_{111})]Z + f_Y(H_{111})b_Y)$$

$$F_{333} = \sqrt{32}(b_{\text{nucl}} + b_{ne}[1 - f(H_{333})]Z + f_Y(H_{333})b_Y)$$

# Short-range limits

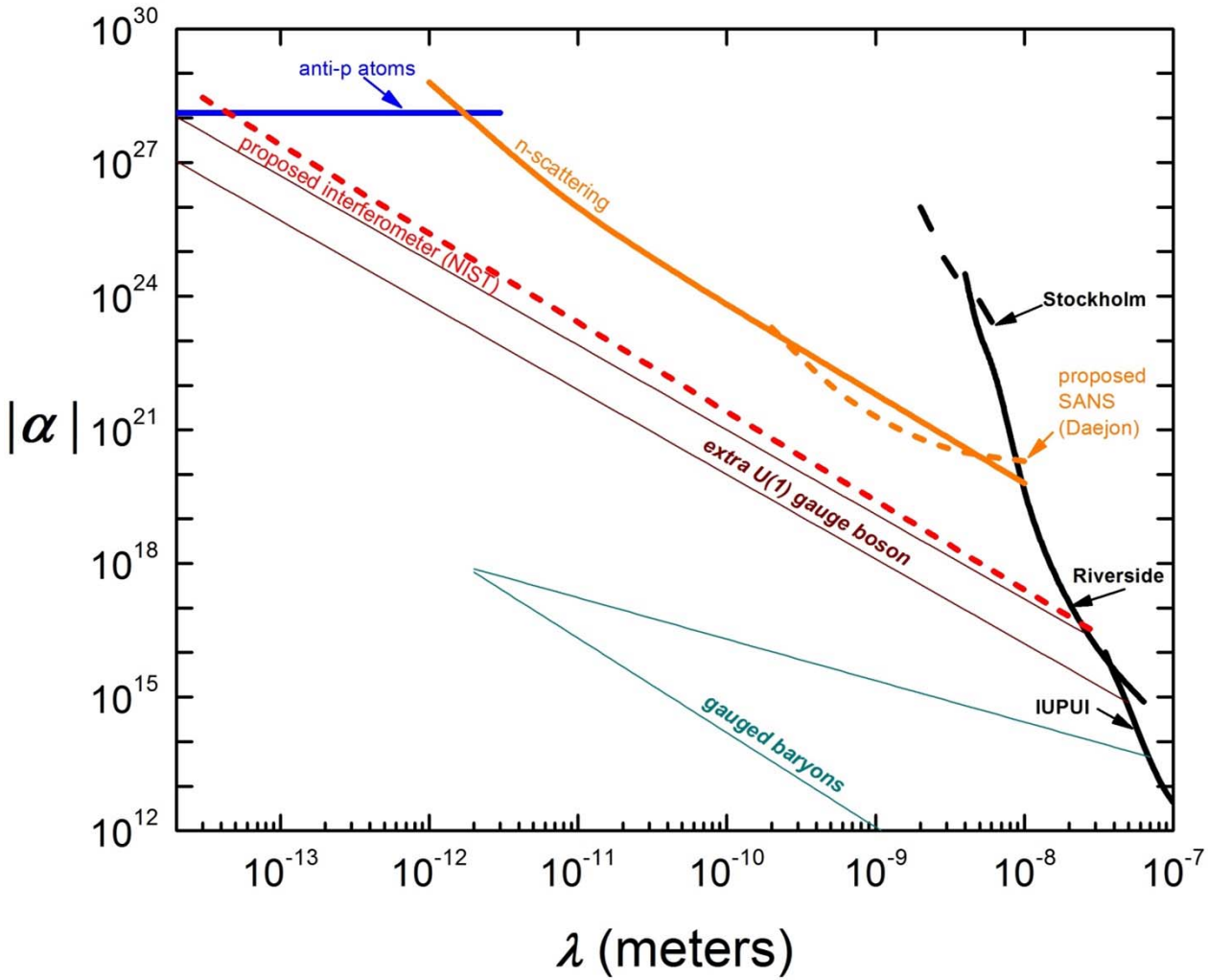


Anti-p: V.V. Nesvizhevsky and K.V. Protasov, Class. Quantum Grav. 21 4557 (2004)

n-scattering: V. Nesvizhevsky, G. Pignol, K. Protasov, PRD 77 034020 (2008)

interferometry: G. Greene, V. Gudkov, PRC 75 015501 (2007)

SANS: Y. Kamia GRANIT2014 (Les Houches, 6 March 2014)

Theory: S. Dimopoulos, A. Geraci, PRD 68 124021 (2003)
P. Fayet, PRD 75 115017 (2007)

# Additional motivation – chameleon dark energy

*Courtesy W. M. Snow, Ke Li, Indiana U.*

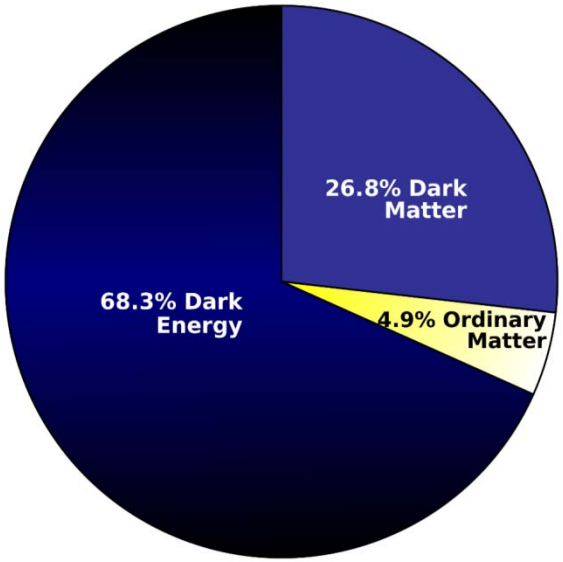


DE model: scalar field $\varphi$ driving acceleration

price: long-range interactions (upset 5th force limits)

Fix: coupling to matter + non-linear self-interaction[1,2]

$$V_{eff}(\varphi) = \frac{\beta}{M_{\mathrm{Pl}}}\varphi\rho + \frac{\Lambda^{4+n}}{\varphi^n}$$

| | |
|---|---|
| $\Lambda = 2.4\times10^{-12}\,Gev$ | dark energy scale |
| $\rho$ | local density of matter |
| $\beta$ | coupling constant of chameleons with matter |
| $M = 2.44\times10^{18}\,Gev$ | reduced Planck Mass |

$$\Rightarrow\ m_\varphi{}^2 = \frac{\partial^2 V_{eff}}{\partial^2\varphi} \approx n(n+1)\Lambda^{4+n}\left(\frac{\beta\rho}{nM\Lambda^{4+n}}\right)^{\frac{n+2}{n+1}}$$

**Cuts off in presence of matter**


[1] J. Khoury, A. Weltman, PRL 93 171104 (2004)

[2] P. Brax, G. Pignol, D. Roulier, PRD 88 083004 (2013)

# Bouncing UCN, interferometer for chameleon

GRS: T. Jenke et al., PRL 112, 151105 **(2014)**

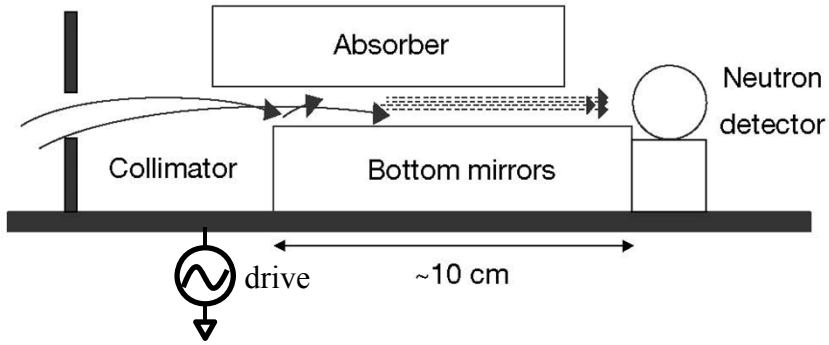


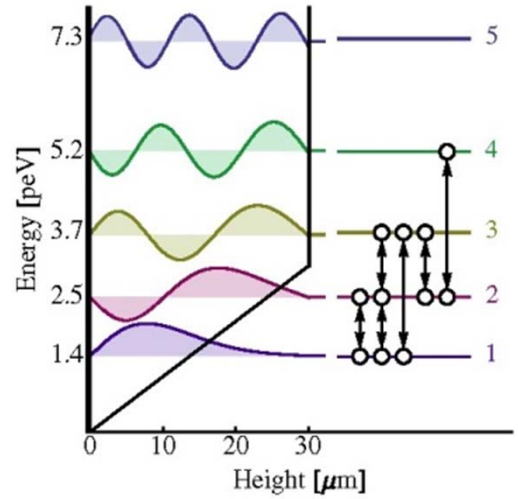


$$V_{eff}(\varphi) = \frac{\Lambda^{4+n}}{\varphi^{n}} + \rho\frac{\beta\varphi}{M}$$

concept: P. Brax et al., PRD 88 083004 (2013)

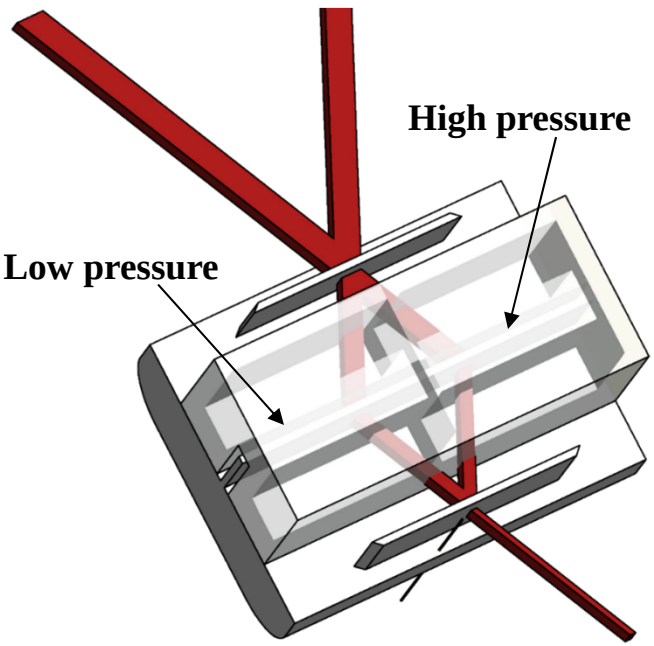


Proposal: NIST (2014); courtesy K. Li, W. M. Snow

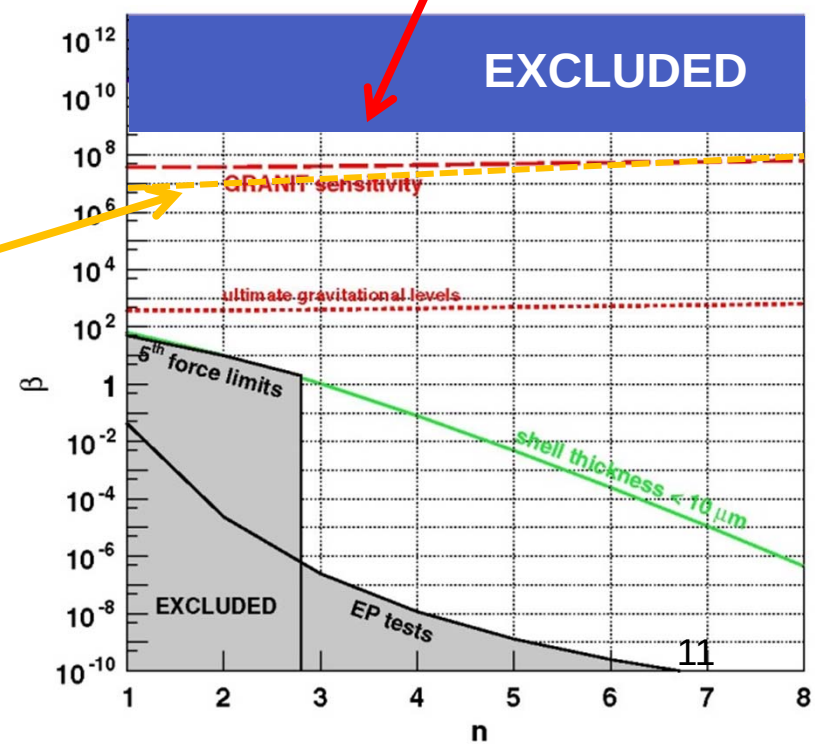

# Spin-Dependent Forces

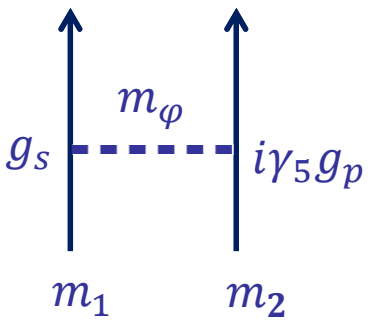


## Monopole-dipole [1]

$$V(r) = g^1_{S,V} g^2_{P,A} \frac{\hbar^2}{8\pi m_2} \hat{\sigma}\cdot\hat{r}\left(\frac{1}{\lambda r} + \frac{1}{r^2}\right) e^{-r/\lambda}$$

"$V_9 + V_{10}$" [2] ($P,T$ odd)

$g^1 g^2$ = strength rel. to $\alpha_s$ ~1
1,2 = n,p,e

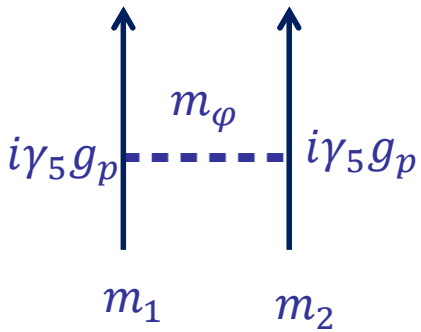


## Dipole-dipole

$$V(r) = g^1_P g^2_P \frac{\hbar^3}{16\pi m_2 c^2}\left[(\hat{\sigma}_1\cdot\hat{\sigma}_2)\left(\frac{1}{\lambda r^2} + \frac{1}{r^3}\right) - (\hat{\sigma}_1\cdot\hat{r})(\hat{\sigma}_2\cdot\hat{r})\left(\frac{1}{\lambda^2 r} + \frac{3}{\lambda r^2} + \frac{3}{r^3}\right)\right] e^{-r/\lambda}$$

**or** $(g^1_A g^2_A + g^1_V g^2_V)$

"$V_3$"

**Axion m-d [1]:**

$$g^1_S g^2_P = \frac{\theta_{QCD}(60\,\text{MeV})m_2}{F_{PQ}{}^2} \frac{2m_u m_d}{(m_u + m_d)^2}$$

$$\lambda = 2\,\text{cm}\left[\frac{F_{PQ}}{1\times 10^{12}\,\text{GeV}}\right]$$


[1] J. E. Moody and F. Wilczek, Phys. Rev. D 30, 130 (1984)

[2] B. Dobrescu and I. Mocioiu, J. High Energy Phys. 0611, 005 (2006)

# Spin-Dependent Forces [1]

$$V_2 = f_2^{ee}\frac{\hbar c}{4\pi}(\hat{\sigma}_1\cdot\hat{\sigma}_2)\left(\frac{1}{r}\right)e^{-r/\lambda}$$

$$\boxed{V_3 = f_3^{ee}\frac{\hbar^3}{4\pi m_e^2 c}\left[(\hat{\sigma}_1\cdot\hat{\sigma}_2)\left(\frac{1}{\lambda r^2}+\frac{1}{r^3}\right)-(\hat{\sigma}_1\cdot\hat{r})(\hat{\sigma}_2\cdot\hat{r})\left(\frac{1}{\lambda^2 r}+\frac{3}{\lambda r^2}+\frac{3}{r^3}\right)\right]e^{-r/\lambda}}$$

$$V_{11} = -f_{11}^{ee}\frac{\hbar^2}{4\pi m_e}[(\hat{\sigma}_1\times\hat{\sigma}_2)\cdot\hat{r}]\left(\frac{1}{\lambda r}+\frac{1}{r^2}\right)e^{-r/\lambda}$$

$$V_{6+7} = -f_{6+7}^{ee}\frac{\hbar^2}{4\pi m_e c}[(\hat{\sigma}_1\cdot\vec{v})(\hat{\sigma}_2\cdot\hat{r})]\left(\frac{1}{\lambda r}+\frac{1}{r^2}\right)e^{-r/\lambda}$$

$$V_8 = f_8^{ee}\frac{\hbar}{4\pi c}[(\hat{\sigma}_1\cdot\vec{v})(\hat{\sigma}_2\cdot\vec{v})]\left(\frac{1}{r}\right)e^{-r/\lambda}$$

$$V_{14} = f_{14}^{ee}\frac{\hbar}{4\pi}[(\hat{\sigma}_1\times\hat{\sigma}_2)\cdot\vec{v}]\left(\frac{1}{r}\right)e^{-r/\lambda}$$

$$V_{15} = -f_{15}^{ee}\frac{\hbar^3}{8\pi m_e^2 c^2}\{[\hat{\sigma}_1\cdot(\vec{v}\times\hat{r})](\hat{\sigma}_2\cdot\hat{r})+(\hat{\sigma}_1\cdot\hat{r})[\hat{\sigma}_2\cdot(\vec{v}\times\hat{r})]\}\left(\frac{1}{\lambda^2 r}+\frac{3}{\lambda r^2}+\frac{3}{r^3}\right)e^{-r/\lambda}$$

$$V_{16} = -f_{16}^{ee}\frac{\hbar^2}{8\pi m_e c^2}\{[\hat{\sigma}_1\cdot(\vec{v}\times\hat{r})](\hat{\sigma}_2\cdot\vec{v})+(\hat{\sigma}_1\cdot\vec{v})[\hat{\sigma}_2\cdot(\vec{v}\times\hat{r})]\}\left(\frac{1}{\lambda r}+\frac{1}{r^2}\right)e^{-r/\lambda}$$

$$V_{4+5} = -Z\left[f_\perp^{ee}+f_\perp^{ep}+\left(\frac{A-Z}{Z}\right)f_\perp^{en}\right]\frac{\hbar^2}{8\pi m_e c}[\hat{\sigma}_1\cdot(\vec{v}\times\hat{r})]\left(\frac{1}{\lambda r}+\frac{1}{r^2}\right)e^{-r/\lambda}$$

$$\boxed{V_{9+10} = Z\left[f_r^{ee}+f_r^{ep}+\left(\frac{A-Z}{Z}\right)f_r^{en}\right]\frac{\hbar^2}{8\pi m_e}(\hat{\sigma}_1\cdot\hat{r})\left(\frac{1}{\lambda r}+\frac{1}{r^2}\right)e^{-r/\lambda}}$$

$$V_{12+13} = Z\left[f_v^{ee}+f_v^{ep}+\left(\frac{A-Z}{Z}\right)f_v^{en}\right]\frac{\hbar}{8\pi}(\hat{\sigma}_1\cdot\vec{v})\left(\frac{1}{r}\right)e^{-r/\lambda}$$

72 independent couplings $f_i^{1,2}$



[1] B. Dobrescu and I. Mocioiu, J. High Energy Phys. 0611, 005 (2006)

# Beams near a wall – velocity-dependent

$$V_{AA} \propto g_A^2 \, \vec{\sigma} \cdot (\vec{v} \times \hat{r}) \left( \frac{1}{\lambda} + \frac{1}{r} \right) \frac{e^{-r/\lambda}}{r}$$

PSI: F. Piegsa and G. Pignol, PRL 108 181801 **(2012)**

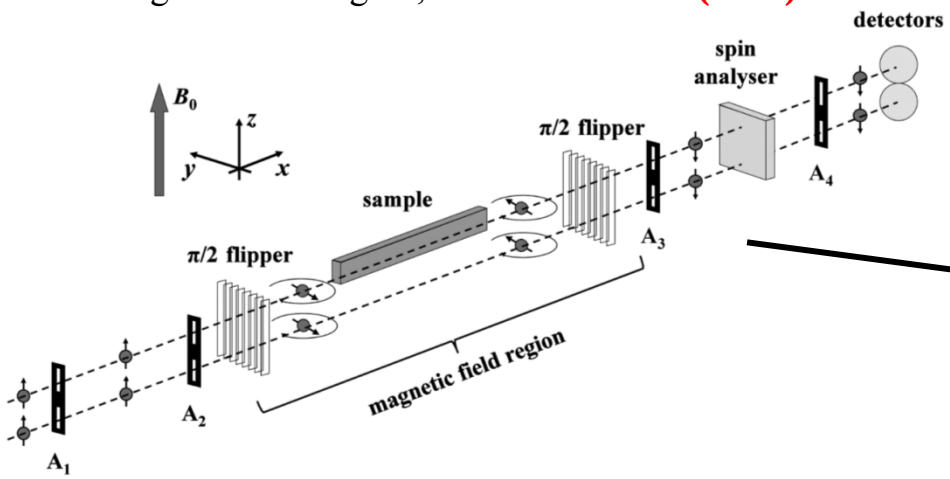


LANL proposed: Courtesy W. M. Snow for the NSR collaboration

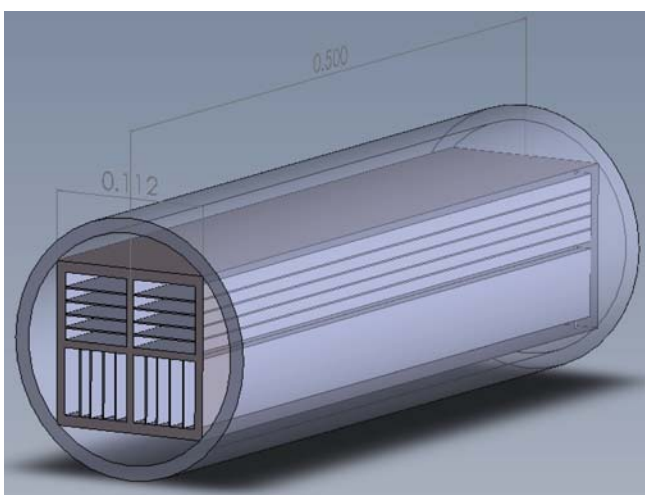

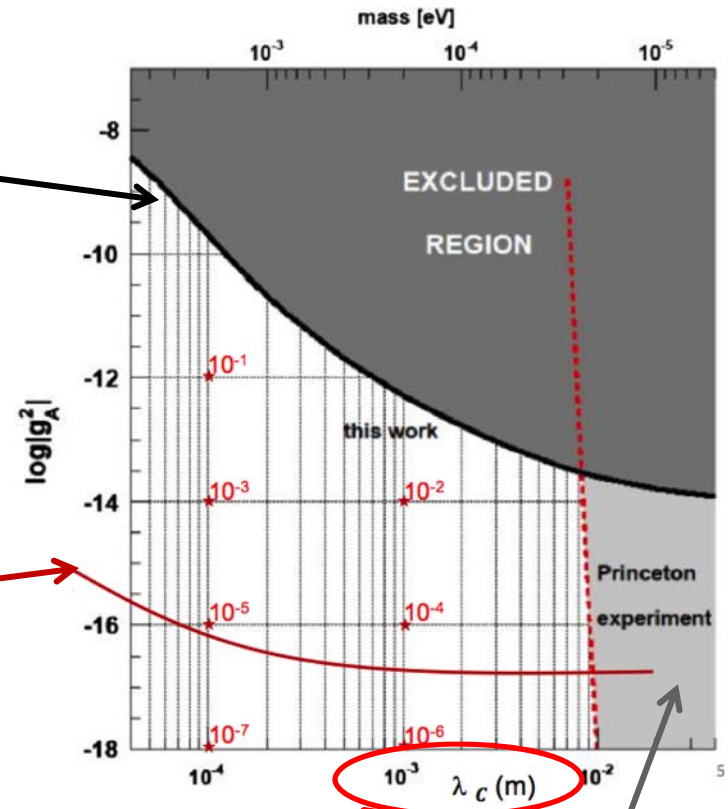


Lack of polarized, non-magnetic test masses

G. Vasilakis, M.V. Romalis et al., PRL 103 261801 (2009)

# Static NMR near a mass – axion search

$$V(r) = g_S^N g_P^n \frac{\hbar^2}{8\pi m_2} \hat{\sigma}\cdot\hat{r}\left(\frac{1}{\lambda r}+\frac{1}{r^2}\right)e^{-r/\lambda}$$

Mainz: K. Tullney et al., PRL 111, 100801 **(2013)**

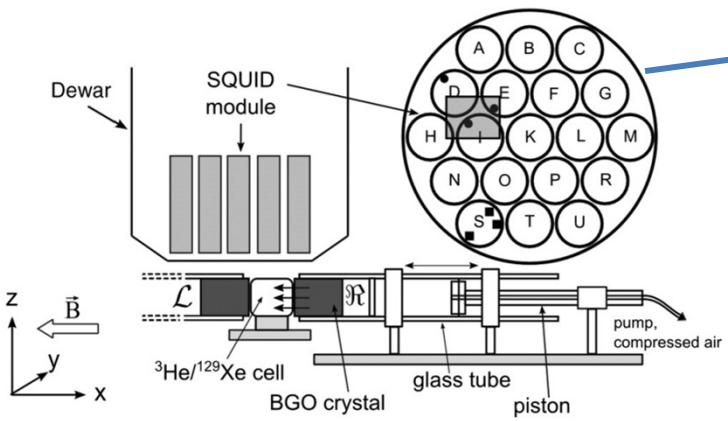


ARIADNE: A. Arvanitaki, A. Geraci, PRL (accepted); arxiv:1403.1290

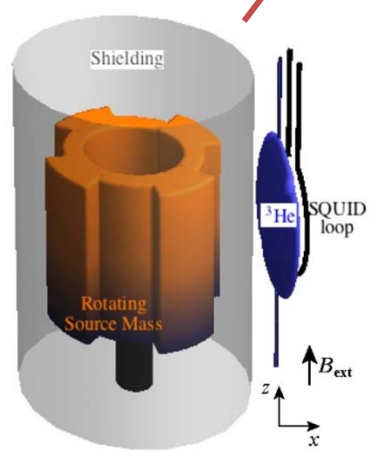


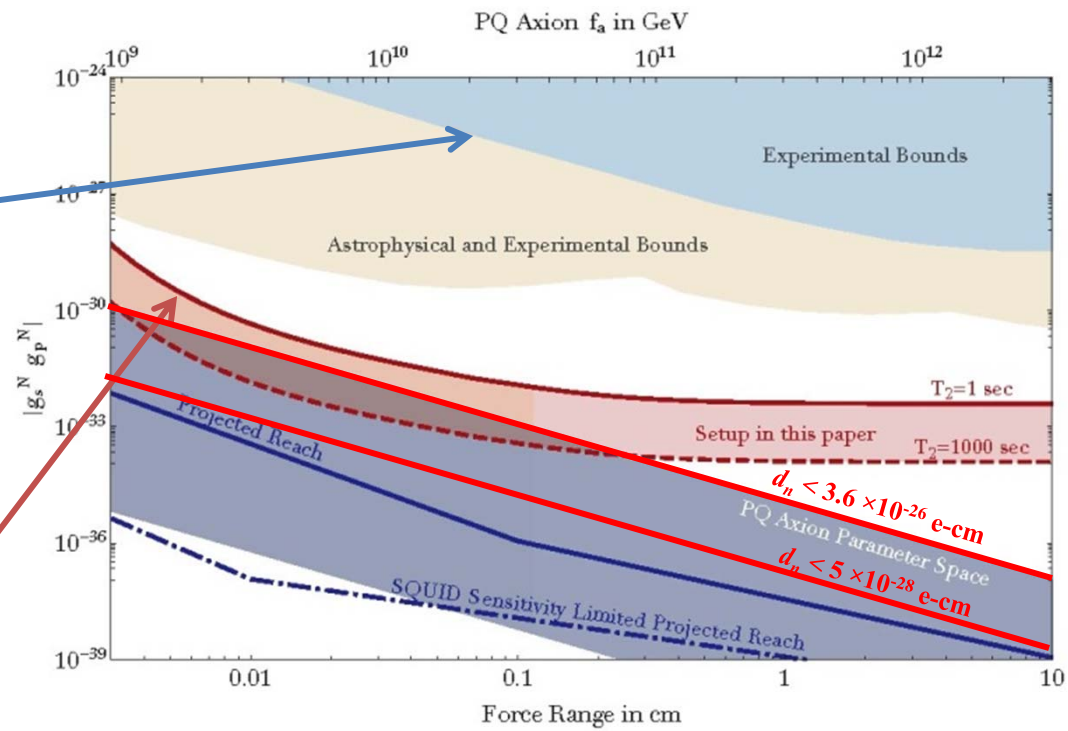


Astrophysical: $g_S^N$ from torsion pendulums, $g_P^N$ from SN1987A [1]

Axion constraint from neutron EDM [2]:

$\theta_{QCD} = 2.78\times10^{15}\ d_n$(e-cm)


[1] G. Raffelt PRD 86, 015001 (2012)

[2] R. J. Crewther, et al., Phys. Lett.91B, 487 (1980)

# Conclusions

- Experimental limits are weak in the interaction range from pm to microns, where macroscopic mass and atomic experiments are largely unfeasible
- Spin-dependent limits even weaker, and at much longer scales

→ Precision nuclear physics experiments have the best sensitivity to many of the interactions in these ranges

- Dark matter
- Dark energy
- Unification models with
  - extra dimensions
  - extended symmetries

→ Great interest in macroscopic forces with weak couplings to matter

# Short-range limits

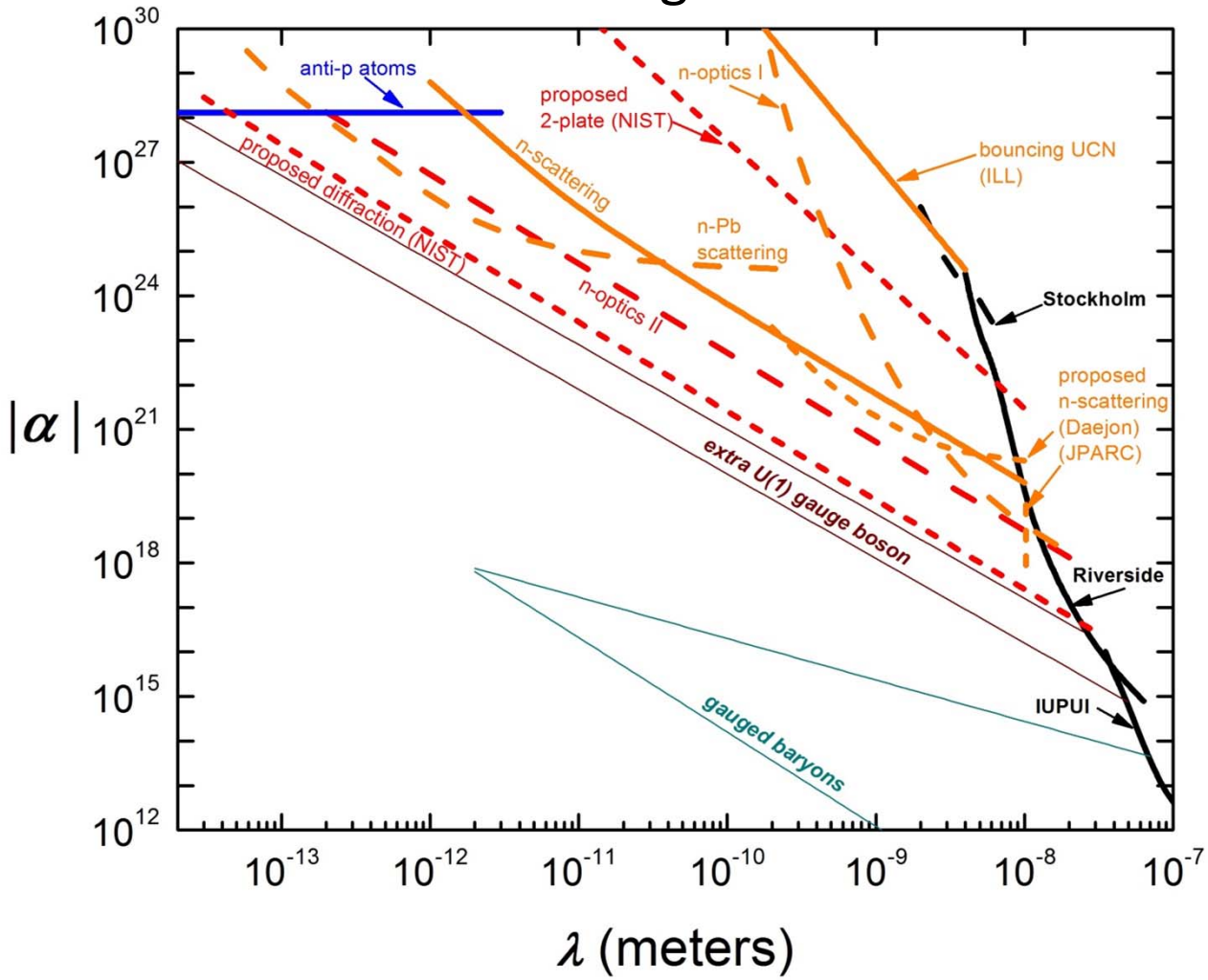


Anti-p, bouncing UCN: V.V. Nesvizhevsky and K.V. Protasov, Class. Quantum Grav. 21 4557 (2004)

n-scattering: V. Nesvizhevsky, G. Pignol, K. Protasov, PRD 77 034020 (2008)

Interferometry, 2-plate, n-optics II: G. Greene, V. Gudkov, PRC 75 015501 (2007)

SANS, n-Pb scattering: Y. Kamia GRANIT2014 (Les Houches, 6 March 2014)

n-optics I: H. Leeb, J. Schmidmayer, PRL

JPARC: T. Shima, NP08 (JPARC, Mito, 5-7 Mar 2008)

Theory: S. Dimopoulos, A. Geraci, PRD 68 124021 (2003)

P. Fayet, PRD 75 115017 (2007)

# Spin – Dependent forces (electron)

$$V(r) = g_S^N g_P^e \frac{\hbar^2}{8\pi m_2} \hat{\sigma}\cdot\hat{r}\left(\frac{1}{\lambda r}+\frac{1}{r^2}\right)e^{-r/\lambda}$$

**Eot-Wash ALP torsion pendulum**

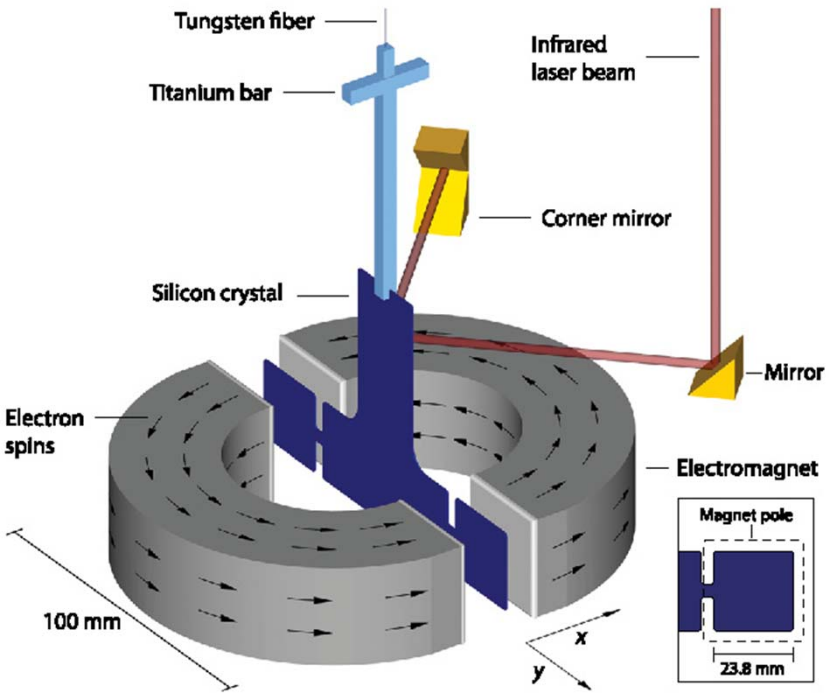


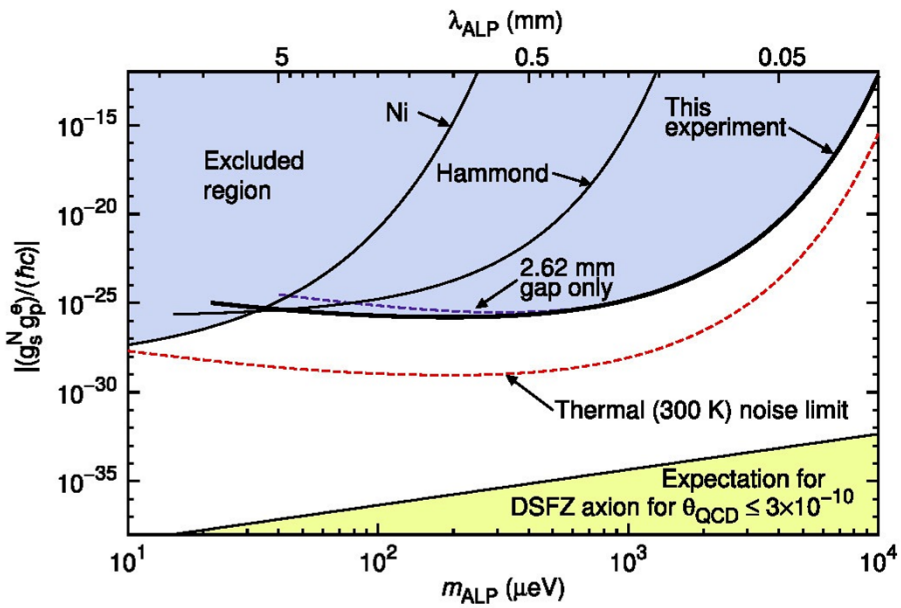


***S. Hoedl et al., PRL 106 (2011) 041801***